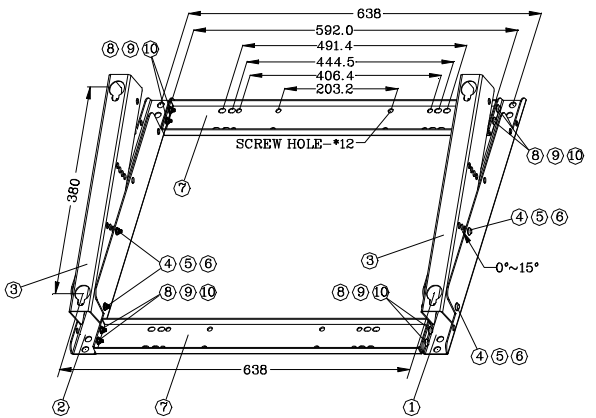


| NO | PART NO | PART NAME | Q'TY | MATERIAL | TR | REMARKS |
|---|---|---|---|---|---|---|
| 15 | | | | | | |
| 14 | | | | | | |
| 13 | | | | | | |
| 12 | | | | | | |
| 11 | | | | | | |
| 10 | 5/16-18UNC | NUT | 8 | STEEL | BLACK | |
| 9 | 5/16-18UNC-11/16 | SCREW | 8 | STEEL | BLACK | |
| 8 | $\phi 8.5^{0}_{-0.1} \times \phi 14.0^{+0.2}_{-0.1} \times 1.5^{T}$ | SPRING WASHER | 8 | STEEL 1.5T | BLACK | |
| 7 | 59 LANGFF0185□-1P--- | WALL MOUNT ANGLE LINK | 2 | SPCC 2T | BLACK | |
| 6 | 5/16-18UNC | NUT | 4 | STEEL | BLACK | |
| 5 | 5/16-18UNC-3 3/16 | SCREW | 4 | STEEL | BLACK | |
| 4 | $\phi 8.5^{0}_{-0.1} \times \phi 17.0^{+0.2}_{-0.1} \times 1.5^{T}$ | WASHER | 8 | STEEL 1.5T | BLACK | |
| 3 | 70 LANGP0196-1P--- | WALL MOUNT ROTATE ANGLE | 2 | SPCC 2T | BLACK | |
| 2 | 49 LANGP0197-1P--C | WALL MOUNT ANGLE (L) | 1 | SPCC 2T | BLACK | |
| 1 | 79 LANGP0197-1P--B | WALL MOUNT ANGLE (R) | 1 | SPCC 2T | BLACK | |
| 17 DANGP0197-1P--A | | | | | | |

REVISIONS

| SCALE | | ≤3 | 3< ≤10 | 10< ≤30 | 30< ≤80 | 80< ≤180 | 180< ≤315 | 315< |
|---|---|---|---|---|---|---|---|---|
| AT-1 | ± | 0.05 | 0.08 | 0.1 | 0.15 | 0.2 | 0.25 | 0.3 |
| AT-2 | ± | 0.07 | 0.1 | 0.15 | 0.2 | 0.3 | 0.4 | 0.5 |
| AT-3 | ± | 0.1 | 0.2 | 0.3 | 0.4 | 0.5 | 0.65 | 0.8 |
| AT-4 | ± | 0.2 | 0.3 | 0.4 | 0.6 | 0.8 | 1.0 | 1.2 |
| AT-5 | ± | 0.3 | 0.5 | 0.7 | 1.0 | 1.2 | 1.5 | 2.0 |
| ANGULAR | | ±0.5° | | ±1° | | ±1.5° | | ±2° |

| Q'TY | MATERIAL | TR. |
|---|---|---|
| 1 SET | | |

| DSGN | DWN | CKD | APPD |
|---|---|---|---|
| WEN 91/4/8 | | WAYNE 91/4/8 | W.H.HUANG 91/4/8 |

| | |
|---|---|
| 17 | DANGP0197-1P--A |
| CKD NO. | PART NO. |
| SECTION: | RD2 |
| UNIT | M/M |
| NAME | WALL MOUNT |
| SCALE | |
| DRAW NO. | |

A3(420*297)